Mansoura University Faculty of Engineering Math. & Eng. Physics Dept.	Building & Construction Engineering Program Fall Semester 2013/2014 MATH005: Engineering Mechanics (2)	Date: 24 / 6 /2014 Time: 2 hours Full mark: 50 marks

Exam Guidelines: This Exam contains **6** questions in **2** pages. Start every question in a new page.

(1) [8 pt.] The 3 m wide gate shown in Figure is in static equilibrium when the water level is 1 m above the gate hinge and when $\theta = 60^{\circ}$. Find the weight of the gate.

(2) [9 pt.] Determine the force in members *CE*, *DE* and *GI* of the truss shown.

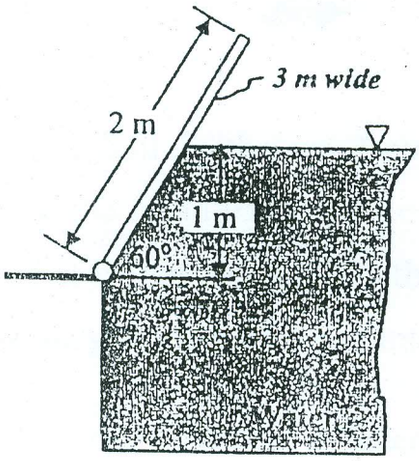

Prob. (1)

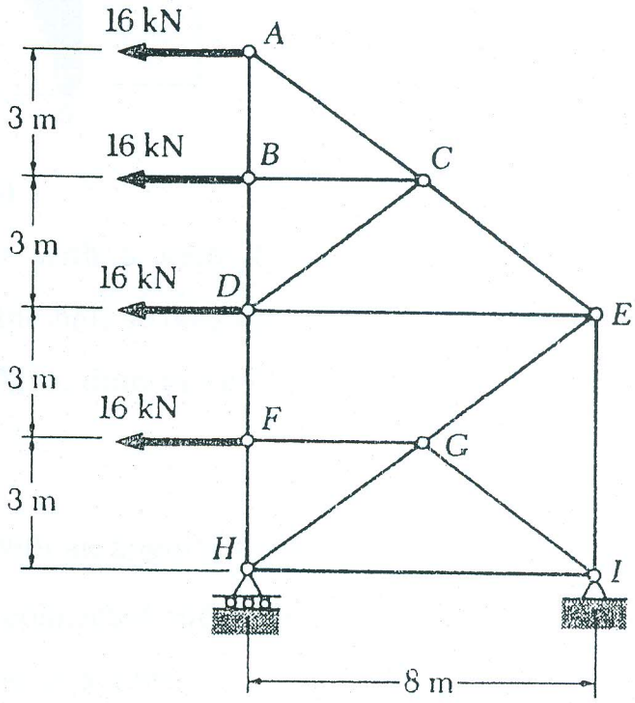

Prob. (2)

(3) [8 pt.] The drum has a weight of 120 lb and rests on the floor for which the coefficient of static friction is $\mu_s = 0.6$. If $a = 2$ ft and $b = 3$ ft, determine the smallest magnitude of the force **P** that will cause impending motion of the drum.

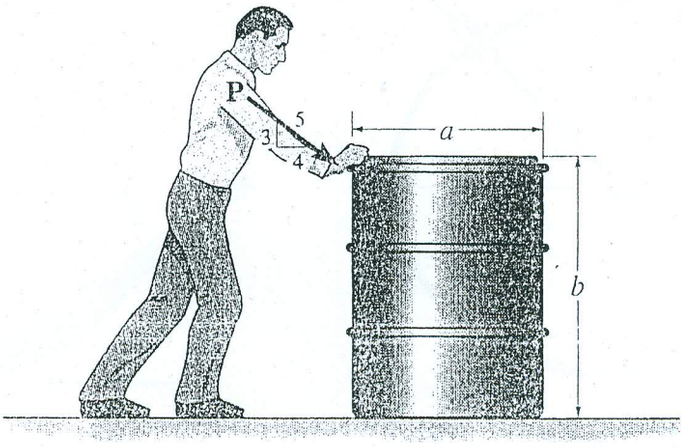

Prob. (3)

من فضلك اقلب الصفحة

(4) **[8 pt.]** The smooth disk shown in Figure is pinned at D and has a weight of 20 lb. Neglecting the weights of the other members, determine the horizontal and vertical components of reaction at pins B and D.

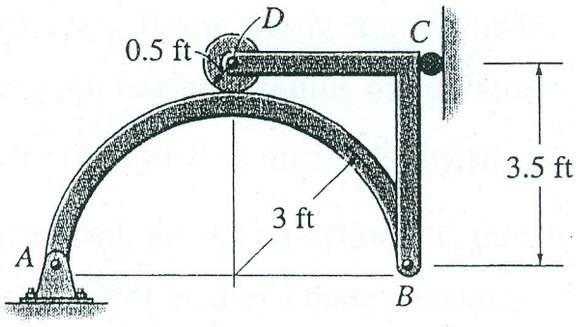

Prob. (4)

(5) **[9 pt.]** The ball is thrown from the tower with a velocity of 20 ft/s as shown. Determine the x and y coordinates to where the ball strikes the slope. Also, determine the speed at which the ball hits the ground. Also, determine the radius of curvature of the trajectory at the starting point.

(6) **[8 pt.]** The rod OA rotates counterclockwise with an angular velocity of $\dot{\theta} = 5$ rad/s and angular acceleration of $\ddot{\theta} = 2$ rad/s^2. Two pin-connected slider blocks, located at B, move freely on OA and the curved rod whose shape is a limaçon described by the equation $r = 100(2 - \cos\theta)$ mm. Determine the magnitude of the velocity and the acceleration of the slider blocks at the instant $\theta = 120°$.

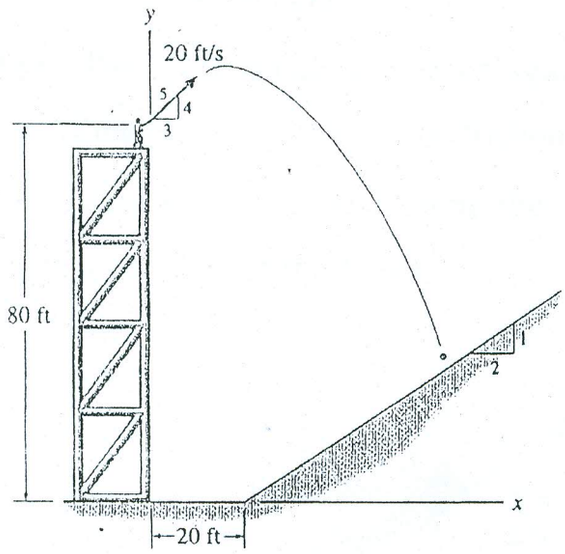

Prob. (5)

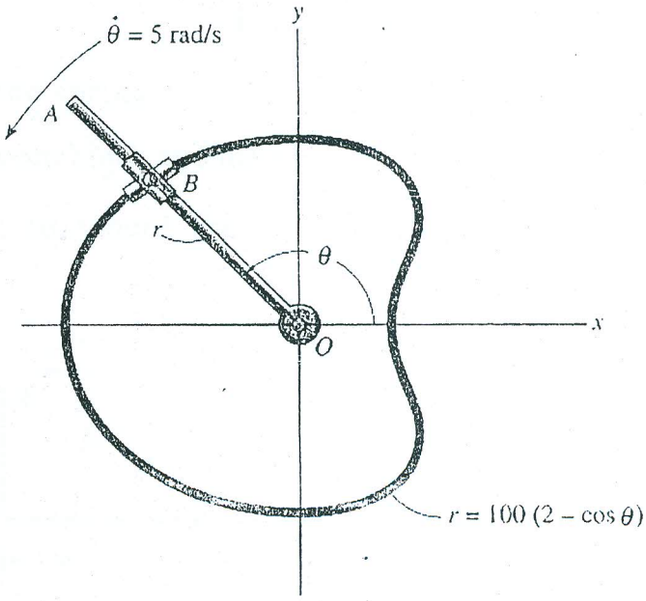

Prob. (6)

With all best wishes
Dr.\ Waleed Elbeshbeeshy & Dr.\ Mohamed Soror