| | | |
|---|---|---|
| Mansoura University<br>Faculty of Engineering<br>Math. & Eng. Physics Dept. | BME Program<br>Fall Semester 2014/2015<br>MATH002: Engineering Mechanics (1) | Date: 15 / 1 /2015<br>Time: 2 hours<br>Full mark: 50 marks |

**Exam Guidelines:** This Exam contains **6** questions in **2** pages. Start every question in a new page. The weight of each question is 9 marks.

1- The 150-lb crate is supported by cables AB, AC and AD. Determine the tension in these wires.

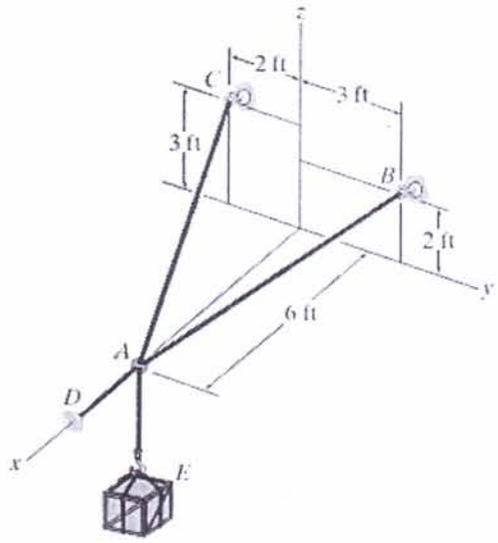


2- The force system acting on the machine part is equivalent to the single force R=95i+10j lb acting at O. Determine the force P and the distance b.

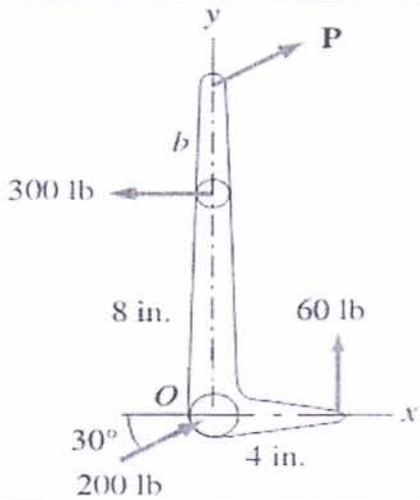


3- I f P =20 N, replace the three couples with a single equivalent couple, specifying its magnitude and the direction of its axis

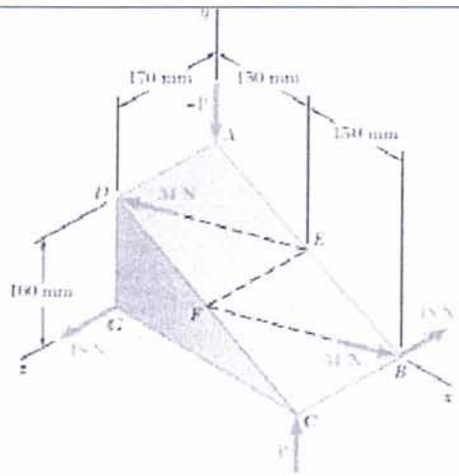


من فضلك اقلب الصفحة

4- Determine the reactions at B and C when a = 1.5 in

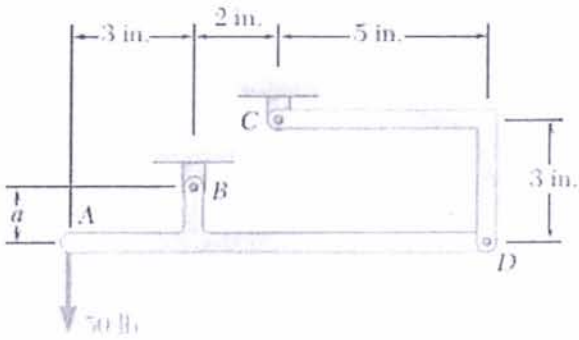


5- The telescoping arm ABC is used to provide an elevated platform for construction workers. The workers and the platform together have a mass of 200 kg and have a combined center of gravity located directly above C. For the position when Θ = 20°, determine (a) the force exerted at B by the single hydraulic cylinder BD, b) the force exerted on the supporting carriage at A.

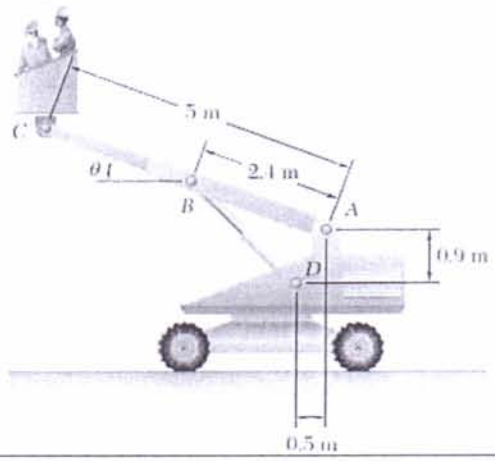


6- A 100-lb force acts as shown on a 300-lb block placed on an inclined plane .The coefficients of friction between the block and the plane are $\mu_s = 0.25$ and $\mu_k = 0.2$. Determine whether the block is in equilibrium, and find the value of the friction force.

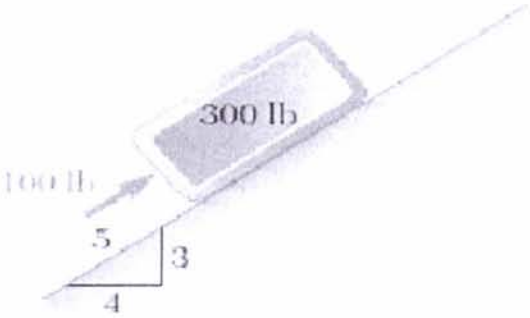


With all best wishes
Dr.\ Mohamed Soror

Question 1:

$A(6,0,0), B(0,2,3), C(0,-2,3)$

$T_{AD} = |T_{AD}|i, \quad W = -150\,k,$

$$T_{AB} = |T_{AB}|u_{AB} = |T_{AB}|\frac{-6i+3j+2k}{\sqrt{36+9+4}} = \frac{|T_{AB}|}{7}(-6i+3j+2k),$$

$$T_{AC} = |T_{AC}|u_{AC} = |T_{AC}|\frac{-6i-2j+3k}{\sqrt{36+4+9}} = \frac{|T_{AC}|}{7}(-6i-2j+3k),$$

$\sum F_y = 0, \quad \frac{3|T_{AB}|}{7} = \frac{2|T_{AC}|}{7}$ or, equivalently $|T_{AB}| = \frac{2}{3}|T_{AC}|$ ……(1)

$$\sum F_z = 0, \quad \frac{2|T_{AB}|}{7} + \frac{3|T_{AC}|}{7} = 150 \;\ldots\ldots\ldots\ldots\ldots\ldots\ldots\ldots\ldots\ldots\ldots\ldots (2)$$

Substituting from (1) into (2), we obtain

$|T_{AC}| = 242\ lb, \qquad |T_{AB}| = 161.538\ lb.$

$\sum F_x = 0, \quad |T_{AD}| - \frac{6|T_{AB}|}{7} - \frac{6|T_{AC}|}{7} = 0$ which implies that

$|T_{AD}| = 346.147.$

Question 2:

$P = P_x i + P_y j \qquad \sum F = 95i + 10j,$

$P_x - 300 + 200\cos 30 = 95$, which implies that $P_x = 221.795\ lb.$

$P_y + 60 + 200\sin 30 = 10$, which implies that $P_y = -150\ lb.$

$\sum M_o = 0, \quad (60)(4) + (300)(8) - P_x(8+b) = 0,$ which implies that $b = 3.9\ in.$

Question 3:

A(0,160,0), B(300,0,0), E(150,80,0), C(300,0,170), D(0,160,170), F(150,80,170).

$$F_{34} = 34u_{ED} = 34\frac{-150i + 80j + 170k}{\sqrt{(150)^2 + (80)^2 + (170)^2}}$$

$$= \frac{1}{5\sqrt{2}}(-150i + 80j + 170k)\ N.$$

$$M_1 = r_{BE} \times F_{34} = \frac{1}{5\sqrt{2}}\begin{vmatrix} i & j & k \\ -150 & 80 & 0 \\ -150 & 80 & 170 \end{vmatrix}$$

$$= \frac{1}{5\sqrt{2}}(13600i + 25500j)\ N.mm.$$

$$M_2 = r_{OC} \times P = \begin{vmatrix} i & j & k \\ 300 & 0 & 170 \\ 0 & 20 & 0 \end{vmatrix} = (-3400i + 6000k)\ N.mm.$$

$$M_3 = r_{OB} \times F_{18} = \begin{vmatrix} i & j & k \\ 300 & 0 & 0 \\ 0 & 0 & -18 \end{vmatrix} = (5400j)\ N.mm.$$

$$M = M_1 + M_2 + M_3 = -1476.67i + 9006.24j + 6000k \quad N.mm.$$

$$|M| = 10922.1\ N.mm.$$

$$\alpha = \cos^{-1}\frac{-1476.67}{10922.1} = 97.7702°, \quad \beta = \cos^{-1}\frac{9006.24}{10922.1} = 34.45°,$$

$$\gamma = \cos^{-1}\frac{6000}{10922.1} = 56.678°.$$

Question 4:

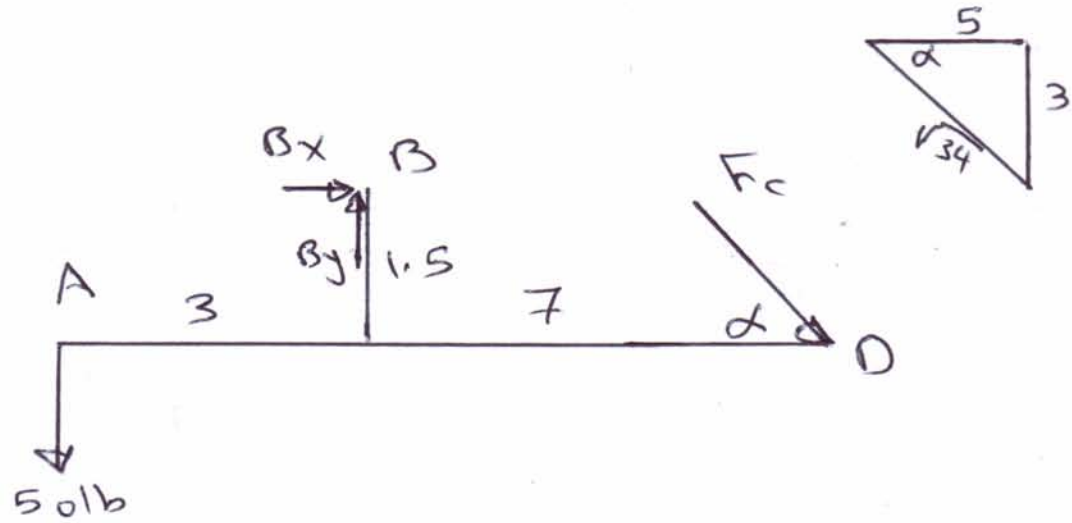


$$\sum M_B = 0 \quad (50)(3) + F_C \frac{5}{\sqrt{34}}(1.5) - F_C \frac{3}{\sqrt{34}}(7) = 0,$$

$F_C = 64.7884\ lb.$

$$\sum F_x = 0,\ \ B_x + (64.7884)\frac{5}{\sqrt{34}} = 0,\ \ B_x = -55.56\ lb.$$

$$\sum F_y = 0,\ \ -50 + B_y - (64.7884)\frac{3}{\sqrt{34}} = 0,\ \ B_y = 83.33\ lb.$$

Question 5:

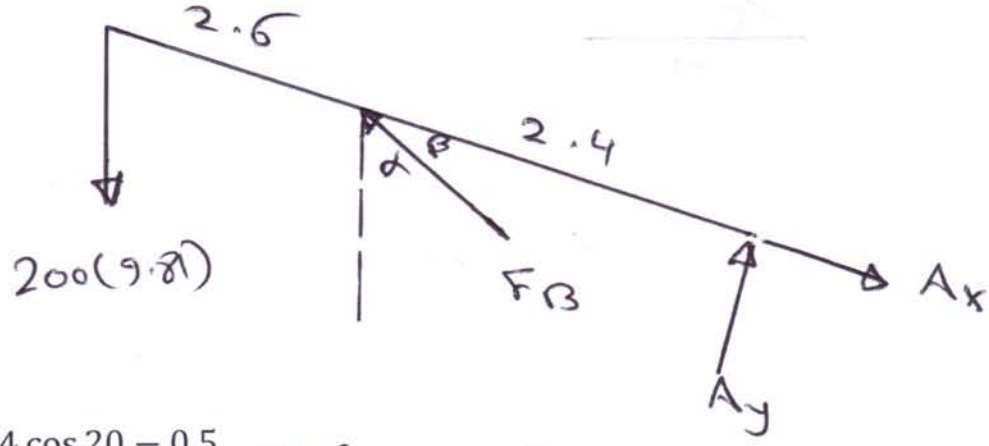


$$\alpha = \tan^{-1}\frac{2.4\cos 20 - 0.5}{2.4\sin 20 + 0.9} = 45.6$$

$\beta = 24.4$

$$\sum M_A = 0, \qquad -2.4\,F_B \sin(24.4) + (200)(9.81)(5)(\cos 20) = 0,$$

$F_B = 9297.88\ N.$

$$\sum F_x = 0, \qquad A_x - F_B\,(\cos 24.4) + 200(9.81)\sin 20 = 0,$$

$$A_x = 7796.38 \;\; N.$$

$$\sum F_y = 0, \;\; A_y + F_B \sin 24.4 - 200(9.81)\cos 20 = 0,$$

$$A_y = -1997.32 \;\; N.$$

Question 6:

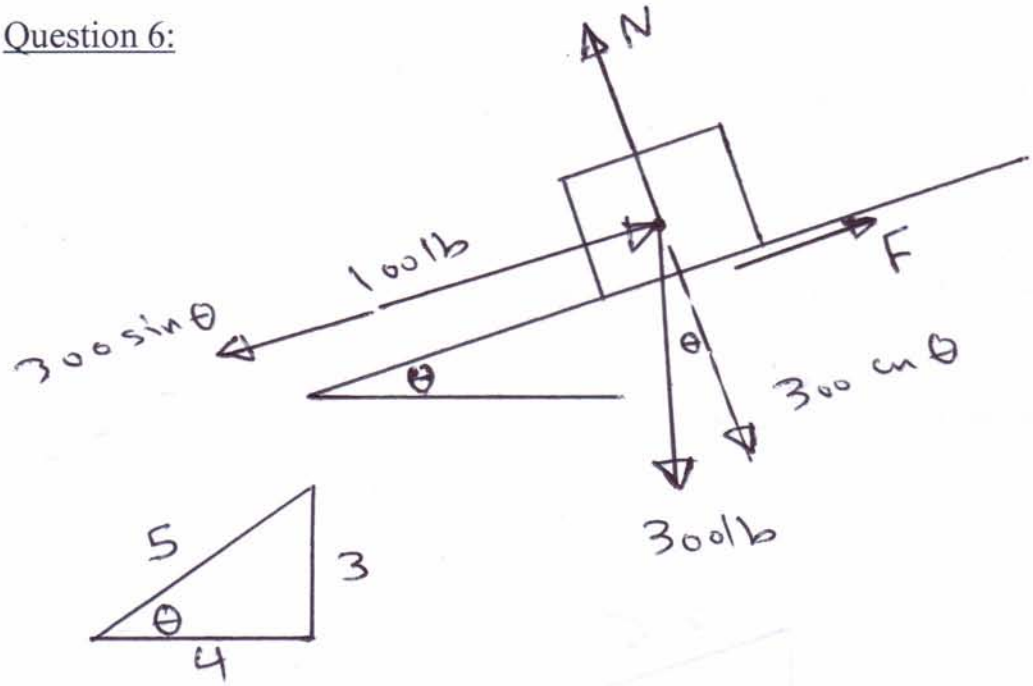


$$\sum F_y = 0, \qquad N = 300\cos\theta = 300\frac{4}{5} = 240\ lb.$$

$$\sum F_x = 0, \qquad F + 100 - 300\frac{3}{5} = 0, \qquad F = 80\ lb.$$

$$\mu_s N = (0.25)(240) = 60\ lb.$$

Since, $F > \mu_s N$ then $F = \mu_k N = (0.2)(240) = 48\ lb.$