Mansoura University
Faculty of Engineering
BME Program

Midterm-(MATH002)
Time: 60 min
Name:
Group:

(1) The chandelier is supported by three chains which are concurrent at point O. If the force in each chain has a magnitude of 60 lb, express each force as a Cartesian vector and determine the magnitude and coordinate direction angles of the resultant force.

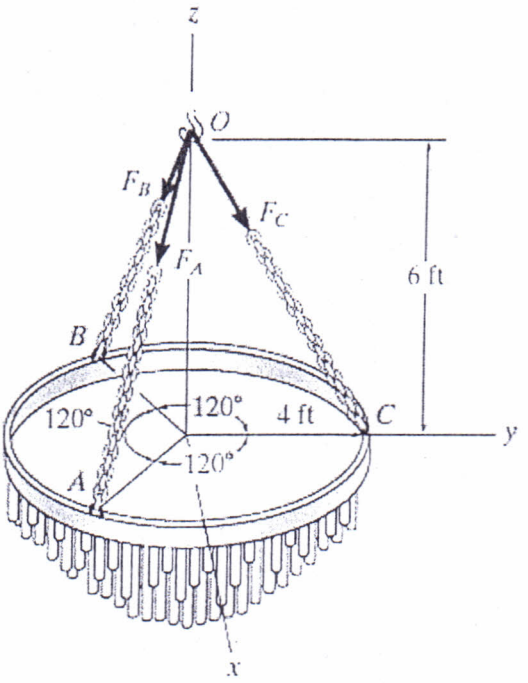

(2) Determine the tension developed in each cord required for equilibrium of the 20-kg lamp.

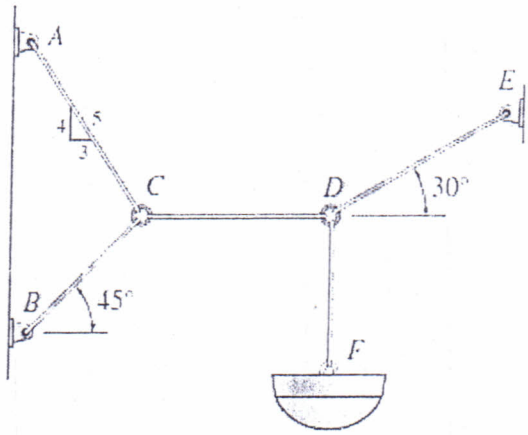

(3) Find the minimum distance between point C(2,5,7) and the line that passes through the points A(1,2,4) and B(3,2,10).

Mansoura University
Faculty of Engineering
BME Program

Midterm-(MATH002)
Time: 60 min
Name:
Group:

20

(1) The chandelier is supported by three chains which are concurrent at point O. If the force in each chain has a magnitude of 60 lb, express each force as a Cartesian vector and determine the magnitude and coordinate direction angles of the resultant force.

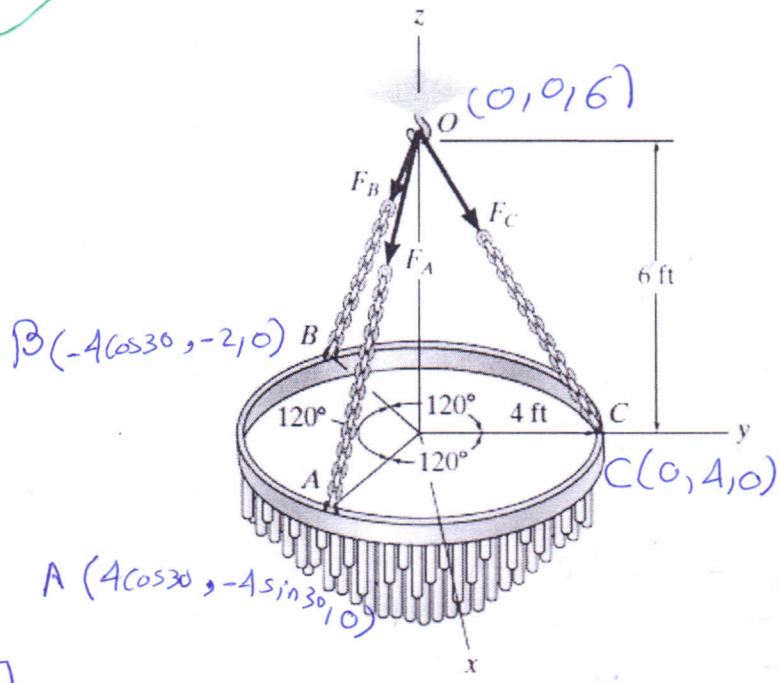

$$\vec{F_C} = 60\left[\frac{0i + 4j - 6k}{\sqrt{52}}\right]$$

$$\vec{F_B} = 60\left[\frac{-3.46i - 2j - 6k}{\sqrt{52}}\right]$$

$$\vec{F_A} = 60\left[\frac{3.46i - 2j - 6k}{\sqrt{52}}\right]$$

$$\vec{R} = \frac{60}{\sqrt{52}}\left[0i + 0j - 18k\right] = \frac{-1080}{\sqrt{52}}k$$

$$\vec{R} = -149.77k$$

$$\boxed{|R| = 149.77}\ lb$$

$$\boxed{\theta_x = 90,\quad \theta_y = 90,\quad \theta_z = 180^\circ}$$

(2) Determine the tension developed in each cord required for equilibrium of the 20-kg lamp.

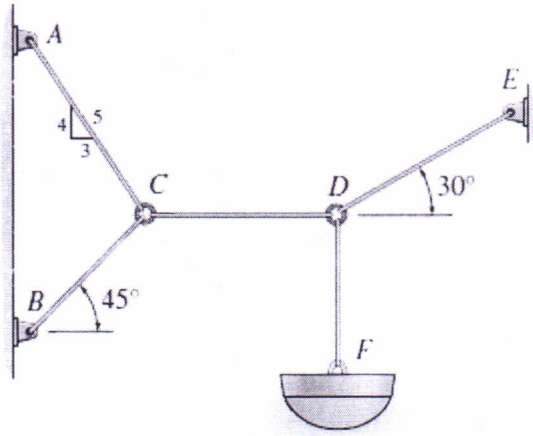

Equilibrium at D :-

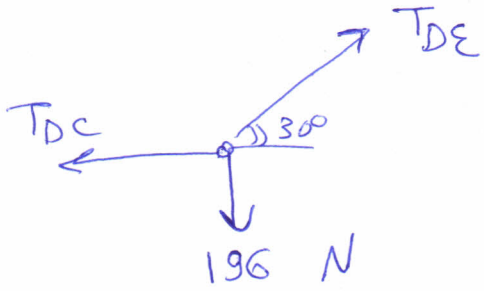

$$\frac{196}{\sin 150} = \frac{T_{DC}}{\sin 120} = \frac{T_{DE}}{\sin 90}$$

$$\boxed{T_{DE} = 392 \text{ N}}$$

$$\boxed{T_{DC} = 339.5}$$

Equilibrium at C :-

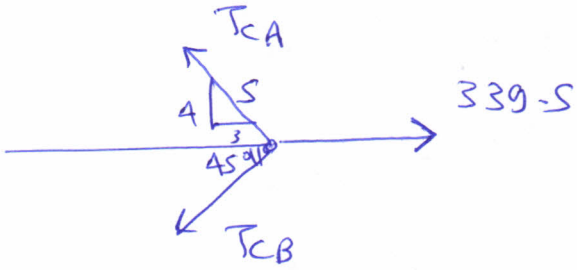

$$\Sigma F_y = T_{CA}\left(\frac{4}{5}\right) - T_{CB}\sin 45 = 0$$

$$\boxed{T_{CA} = 0.884\, T_{CB}}$$

$$\Sigma F_x = 339.5 - \frac{T_{CB}}{\sqrt{2}} - \frac{0.884 T_C (3)}{5} = 0$$

$$\boxed{T_{CB} = 274.35} \text{ N}$$

$$\boxed{T_{CA} = 242.52} \text{ N}$$

(3) Find the minimum distance between point C(2,5,7) and the line that passes through the points A(1,2,4) and B(3,2,10).

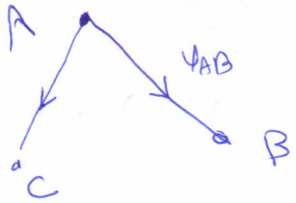

$$\vec{u}_{AB} = \frac{2i + 0j + 6k}{\sqrt{40}}$$

$$\vec{r}_{AC} = i + 3j + 3k$$

$$\vec{r}_{AC} \times \vec{u}_{AB} = \begin{vmatrix} i & j & k \\ 1 & 3 & 3 \\ 2 & 0 & 6 \end{vmatrix} \frac{1}{\sqrt{40}} = \frac{1}{\sqrt{40}}\left[18i + 0j - 6k\right]$$

$$d = |\vec{r}_{AC} \times \vec{u}_{AB}| = \frac{\sqrt{18^2 + 6^2}}{\sqrt{40}} = \boxed{3}$$