Mansoura University Faculty of Engineering Math. & Eng. Physics Dept.	BME Programs Fall Semester 2018/2019 MATH002: Mechanics 1	Date: 9 / 1 /2019 Time: 2 hours Full mark: 50 marks

Exam Guidelines: This Exam contains **6 questions** in **2 pages**, start every question in a new page.

Question 1: [8 Marks] The 800 N sphere is supported by two smooth inclined planes, spring *CD*, and two cables *ABC* and *CE*. Determine the forces of the smooth planes on the sphere and the unstreched length of the spring. If the tensile force of the cable *ABC* is 400 N.

Question 2: [7 Marks] In using the bolt cutter shown, a worker applies two 300 N forces to the handles. Determine the magnitude of the forces exerted by the pens *B* and *C* on the handle of the cutter. What is the mechanical advantage of the cutter.

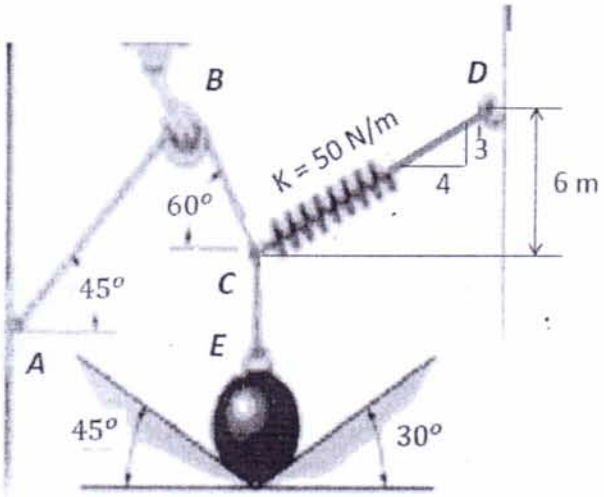

Question 1

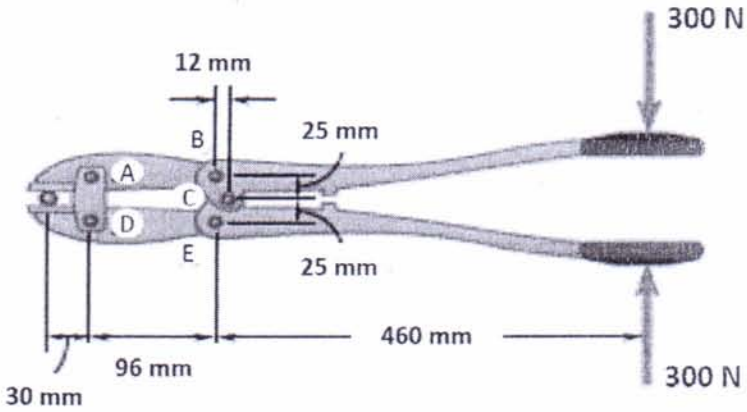

Question 2

Question 3: [12 Marks] The bent rod *ABC* shown is supported by a smooth collar at *A*, rocker at *B*, and short link at *C*. Determine the reactions at *A*, *B*, and *C*.

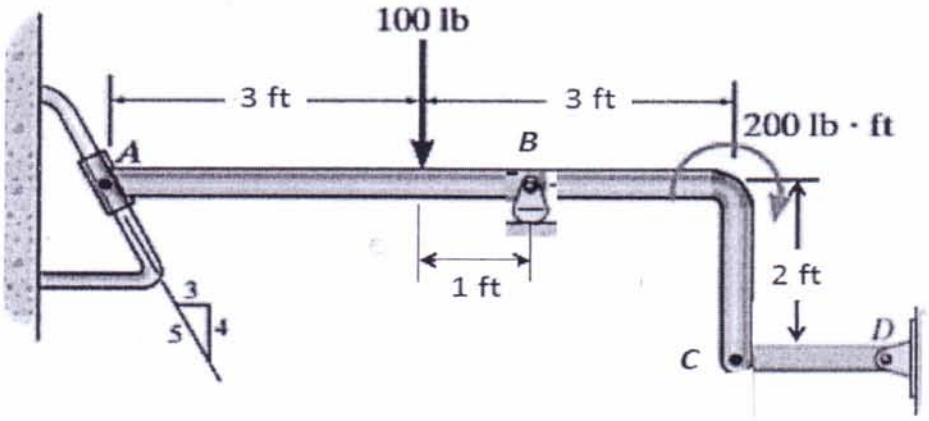

Question 3

من فضلك اقلب الورقة

stion 4: [13 Marks] The slab بلاطه shown lies in x-y plane. Replace the forces-couple ystem acting on slab by a force-couple system at *B*. The force $\mathbf{F}_3$ is vertical.

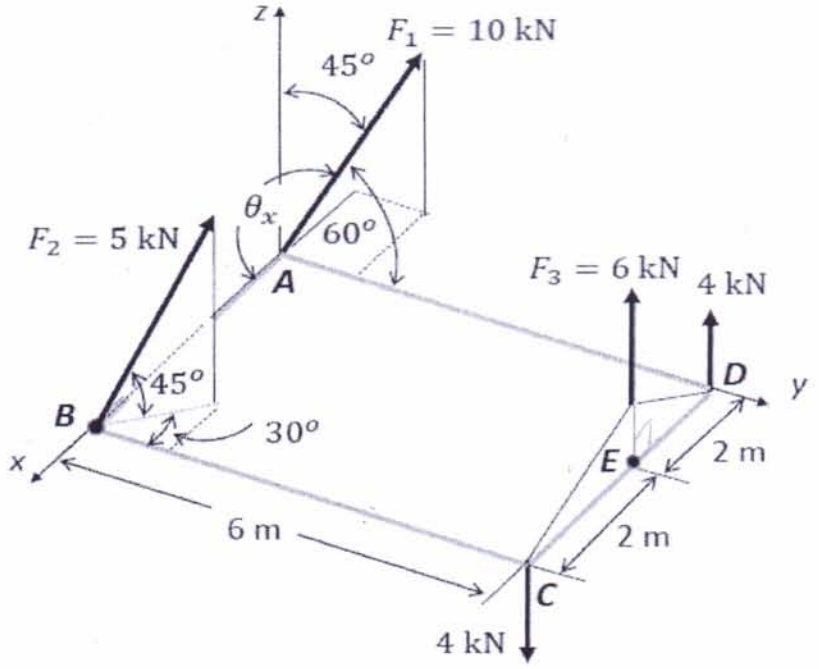

Question 4

Question 5: [6 Marks] The 3 Mg truck shown has a center at G. Determine the magnitude of the force **P** causes tipping إنقلاب of the truck. Also, determine the value of the coefficient of static friction between the front wheels and the road. The brakes of the front wheels are locked, and the rear wheels are free to roll.

Question 6: [8 Marks] The frame shown is supported by rollers at *A* and pen at *E*. Determine the forces exerted on member *CFE*. Take **W** = 400 lb.

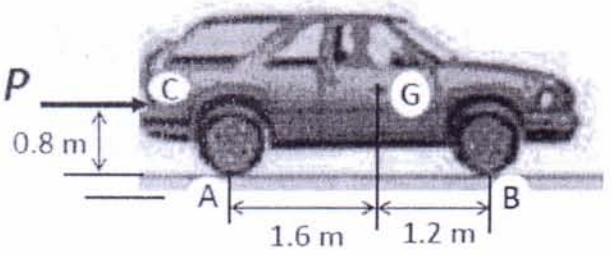

Question 5

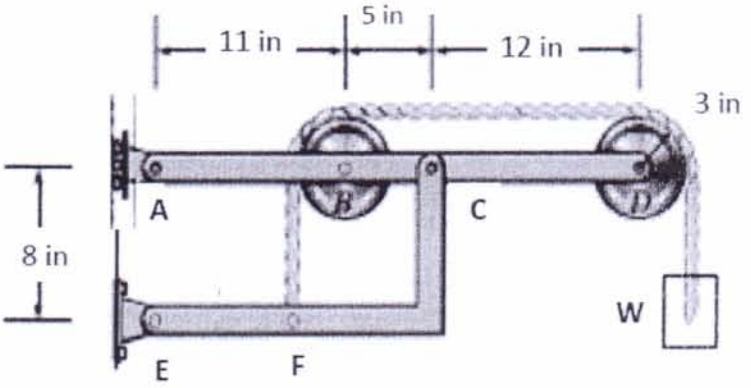

Question 6

ion (1) :-

$F_s = k \cdot \Delta L$

$\Delta L = L - L_o$

$L = \overline{CD} = 10\ m.$

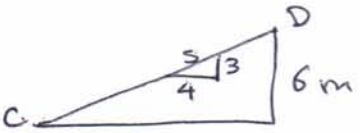

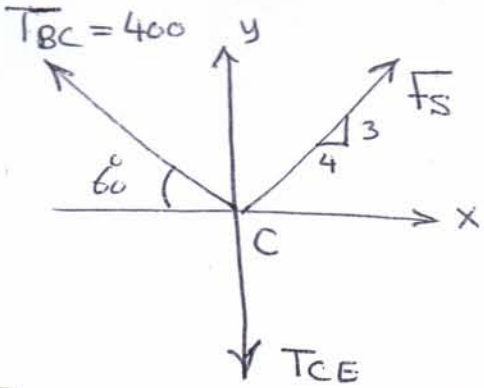

F.B.D.

$$L - \frac{F_s}{k} = L_o \Rightarrow 10 - \frac{F_s}{50} = L_o \rightarrow \boxed{1}$$

Particle C

$$\sum F_x = 0; \quad F_s\left(\frac{4}{5}\right) - 400\cos(60) = 0$$

$$F_s = 250\ N$$

in $\boxed{1}$ $\boxed{L_o = 10 - 5 = 5\ m}$ Ans.

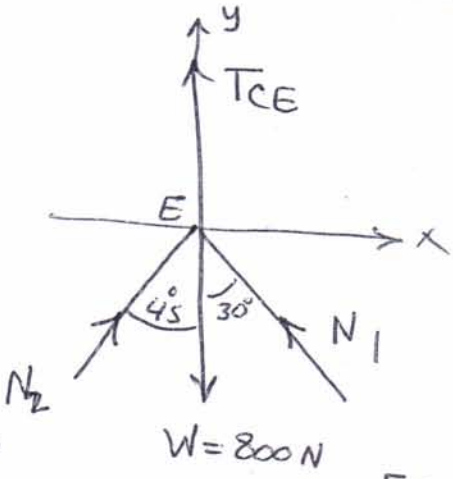

F.B.D.

$$\sum F_y = 0; \quad \underset{250}{\cancel{F_s}}\left(\frac{3}{5}\right) + 400\sin(60) - T_{CE} = 0$$

$$\boxed{T_{CE} = 496.41\ N} \text{ Ans.}$$

Particle E

$$\sum F_x = 0; \quad N_2 \sin(45) = N_1 \sin(30) \rightarrow \boxed{2}$$

$$\sum F_y = 0, \quad N_2 \cos(45) + N_1 \cos(30) + T_{CE} = 800 \rightarrow \boxed{3}$$

Solving $\boxed{2}$ & $\boxed{3}$

$$\boxed{\begin{aligned} N_1 &= 222.25\ N \\ N_2 &= 157.15\ N \end{aligned}} \text{ Ans.}$$

stion (2)

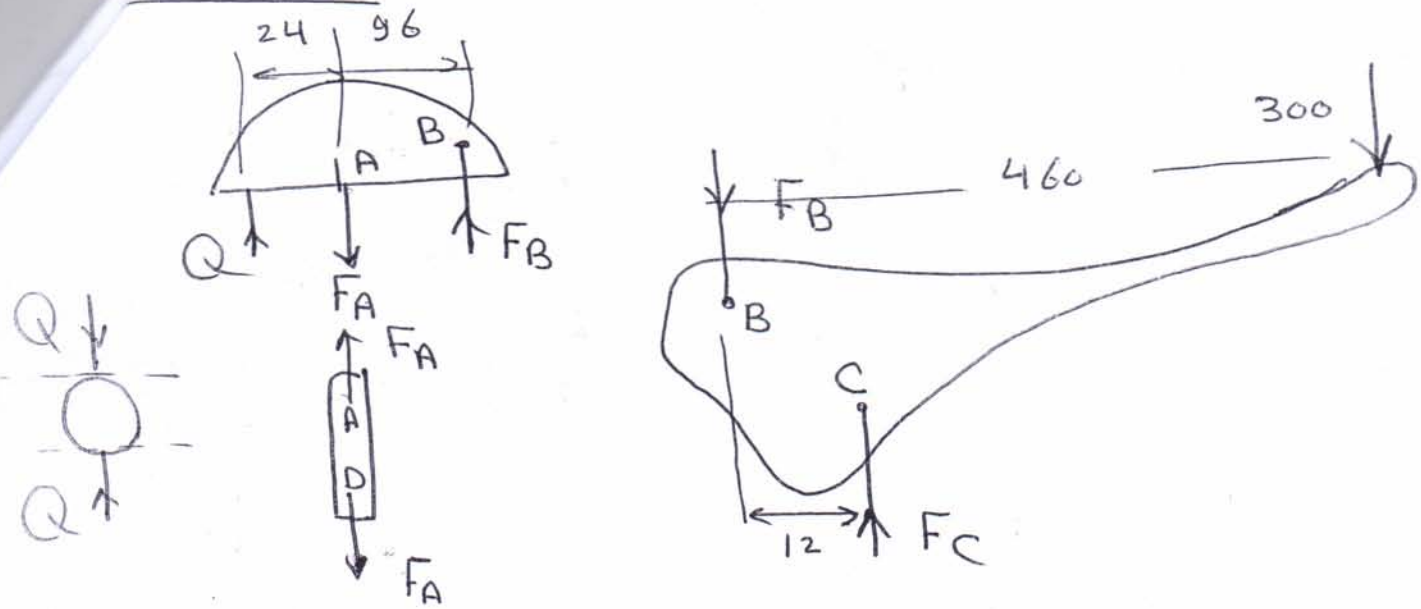

Part BC :→ $\sum M_B = 0;$

$$-300(460) + F_C(12) = 0$$

$$\boxed{F_C = 11\,500 \text{ N}}$$ Ans.

$\sum F_y = 0;$ $\quad F_B + 300 = F_C;$ $\quad \boxed{F_B = 11\,200 \text{ N}}$ Ans.

Part (AB) :→ $\sum M_A = 0;$

$$-Q(30) + F_B(96) = 0$$

$$Q = 35\,840 \text{ N}$$

$$\eta = \frac{\text{output force}}{\text{input force}} = \frac{35\,8400}{300} = \boxed{119.5}$$ Ans.

Question (3) :-

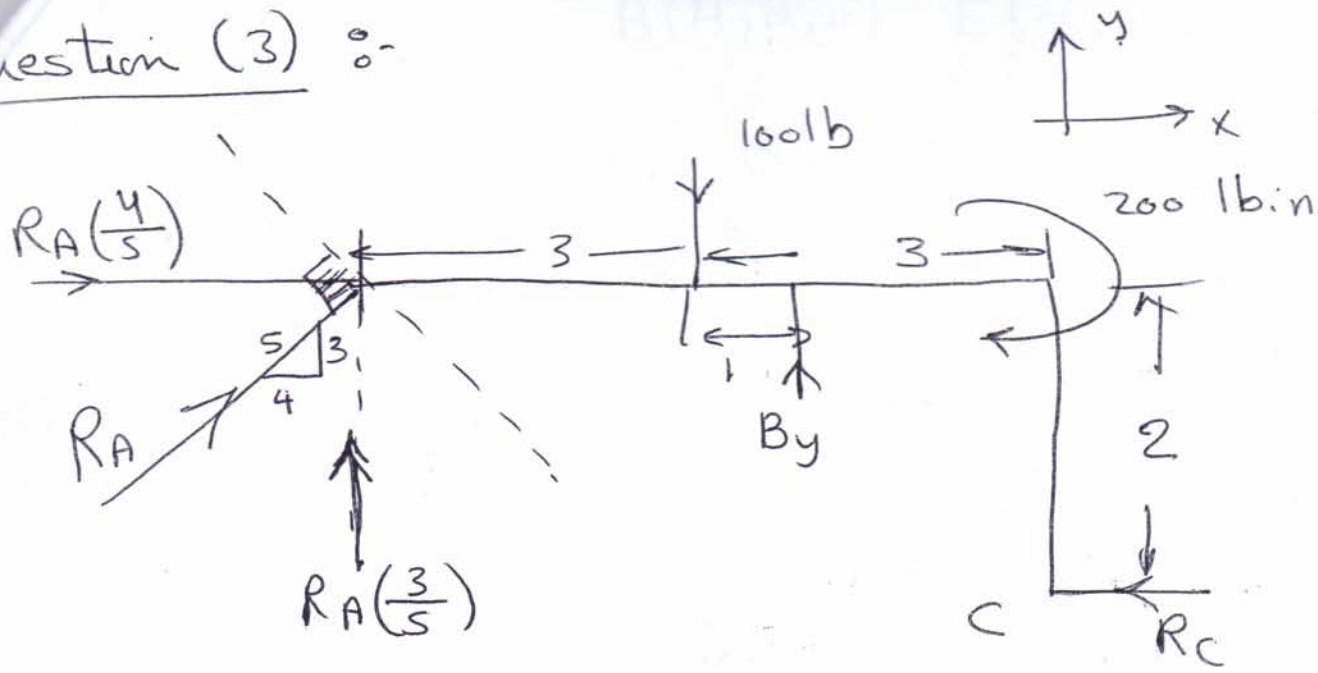

$\sum F_x = 0;\quad R_A\left(\frac{4}{5}\right) = R_C \longrightarrow \boxed{1}$

$\sum F_y = 0;\quad R_A\left(\frac{3}{5}\right) + B_y = 100 \longrightarrow \boxed{2}$

$\sum M_A = 0;\quad -100(3) + B_y(4) - 200 - R_C(2) = 0 \quad \boxed{3}$

Solving equations ① & ② and ③ :

$$\boxed{\begin{aligned} R_A &= -25 \text{ lb} \swarrow \\ R_C &= -20 \text{ lb} \longrightarrow \\ B_y &= 115 \text{ lb} \uparrow \end{aligned}}$$

Ans.

Question (4) :- $B(4,0,0)$ $E(2,6,0)$

$F_1 \Rightarrow \theta_x$ & $\theta_y = 60$, $\theta_z = 45$

$$\cos^2(\theta_x) = 1 - \left(\frac{1}{2}\right)^2 - \left(\frac{1}{\sqrt{2}}\right)^2 = \frac{1}{4} \Rightarrow \cos(\theta_x) \pm \frac{1}{2}$$

$$F_1 = 10\left[\left(-\frac{1}{2}\right) i + \cos(60) j + \cos(45)\right]$$

$$\boxed{F_1 = -5i + 5j + 7.07k = 0}$$

$F_2 \Rightarrow$ $F_z = 5\sin(45) = 3.54$

$F_{xy} = 5\sin(45) = 3.54$

$F_x = -3.54\sin(30) = -1.77$

$F_y = 3.54\cos(30) = 3.06.$

$$\boxed{F_2 = -1.77i + 3.06j + 3.54k}$$

$F_3 = 6k.$, F_4 & $F_5 \Rightarrow$ Couple.

$$M = 4(4)j = 16j$$

$$\Sigma F_1) = \Sigma F)_2$$

$$\boxed{F_R = -6.77i + 8.06j + 16.61k}$$ at B

$$\Sigma M_B)_1 = \Sigma M_B)_2$$

$$M_R = 16j + \begin{vmatrix} i & j & k \\ -4 & 0 & 0 \\ -5 & 5 & 7.07 \end{vmatrix} + \begin{vmatrix} i & j & k \\ -2 & 6 & 0 \\ 0 & 0 & 6 \end{vmatrix}$$

$$\boxed{M_R = 36i + 56.28j - 20k}$$ Ans.

Question (5)

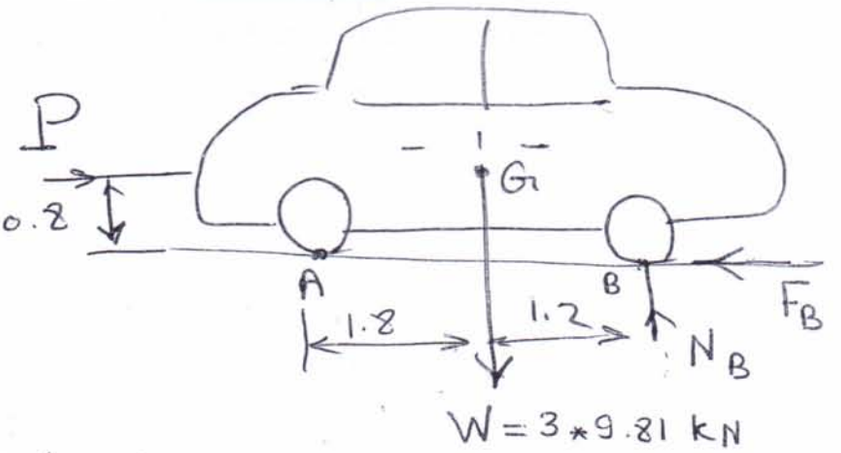

∴ the truck is tipping ⇒ $N_A = 0$.

$\sum M_B = 0;$

$-P(0.8) + 3(9.81)(1.2) = 0$

$\boxed{P = 44.145 \text{ kN}}$ ← Ans.

$\sum F_x = 0; \quad F_B = P = 44.145 \text{ kN}$

but for impending motion (tipping) $F_B = \mu_s N_B$

$\therefore \quad \mu_s N_B = 44.145 \rightarrow \boxed{1}$

$\sum F_y = 0; \quad N_B = 29.43 \text{ kN}$

in $\boxed{1}$ $\quad \boxed{\mu_s = \frac{44.145}{29.43} = 1.5}$ Ans.

Problestion (6) :-

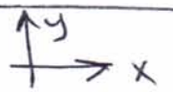

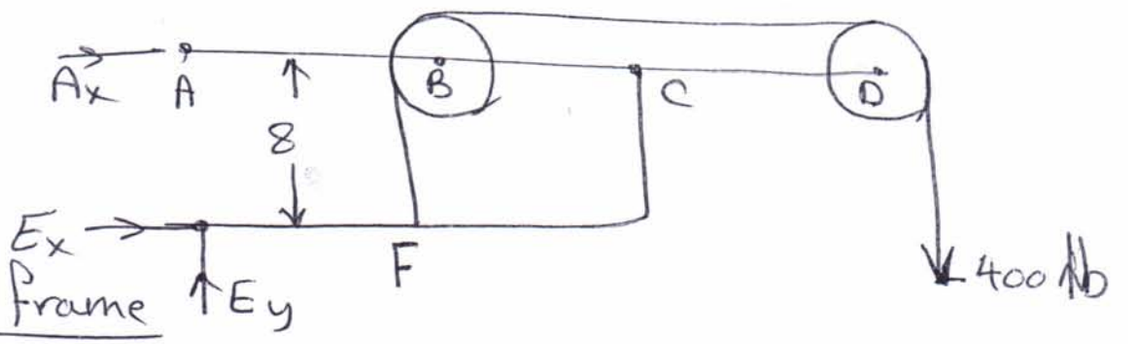

on F.B.D. of frame

$\sum M_A = 0; \quad E_x(8) - 400(31) = 0$

$\boxed{E_x = 1550 \text{ lb}}$ Ans.

$\sum F_y = 0;$ $\boxed{E_y = 400 \text{ lb}}$ Ans.

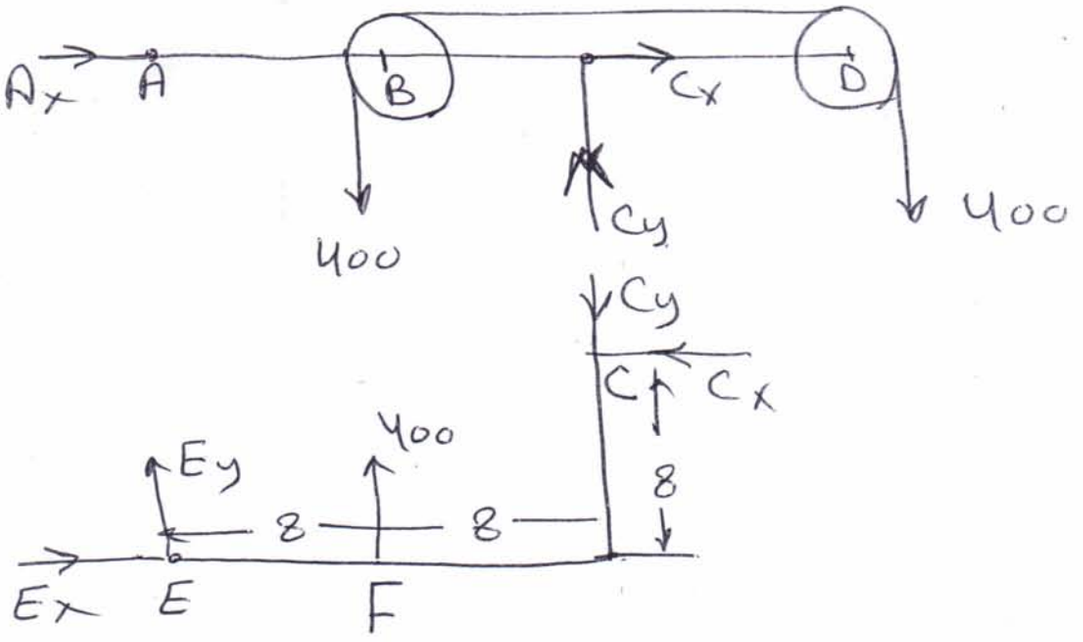

on member CFE:

$\sum F_x = 0;$ $\boxed{C_x = E_x = 1550 \text{ lb}}$ Ans.

$\sum F_y = 0;$ $E_y + 400 = C_y$

$\boxed{C_y = 800 \text{ lb}}$ Ans.

at F $\Rightarrow$ $\boxed{R_F = 400 \text{ lb}}$ Ans.