Mansoura University
Faculty of Engineering
Math. & Eng. Physics. Dept.

Mechanics 1
MTH 002

Level 000. BME
Midterm Exam, April. 2019
Time Allowed: 60 min.

Name: **Group :**

Answer the following question:

(1) Determine the magnitude of F_1 and the distance y for equilibrium if $x = 1.5$ m and $F_2 = 1000$ N.

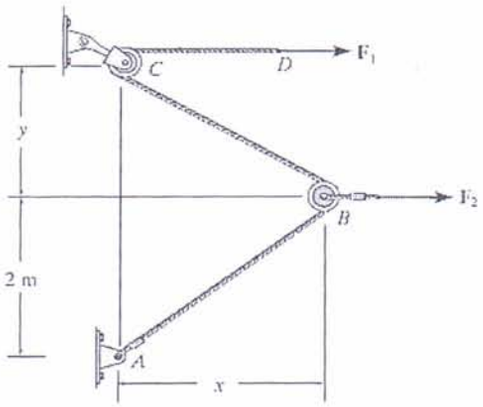

من فضلك اقلب الصفحة

(2) Determine the magnitude and coordinate direction angels of the resultant of two forces F_1 and F_2 , Determine the angle θ between the two cables. Determine the magnitude of the projection of the force F_1 along cable AC.

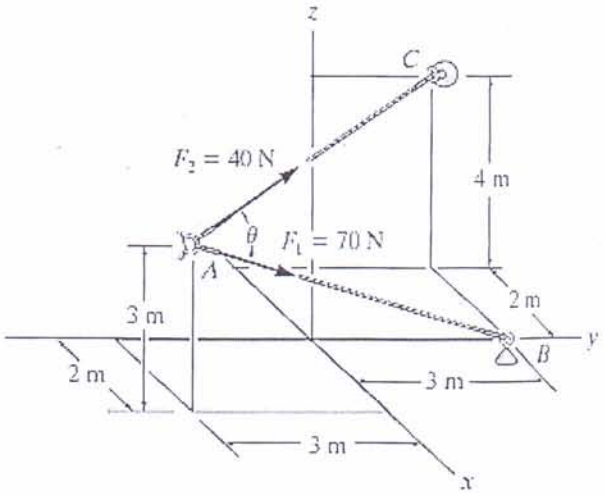

With my best wishes

Dr. Mona Sameeh

ميكانيكا (1) + دوبان

Model Answer

Mansoura University
Faculty of Engineering
Math. & Eng. Physics. Dept.

Mechanics 1
MTH 002

Level 000. BME
Midterm Exam, April. 2019
Time Allowed: 60 min.

Name: Group :

Answer the following question:

(1) Determine the magnitude of F_1 and the distance y for equilibrium if $x = 1.5$ m and $F_2 = 1000$ N.

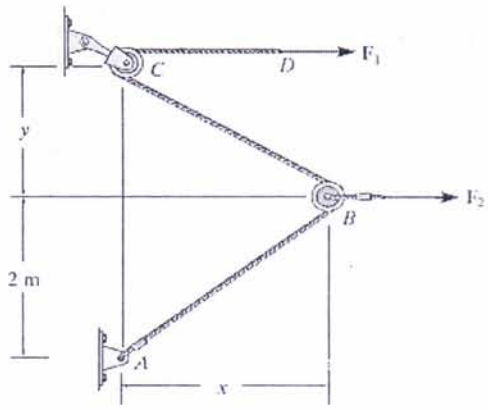

(2)

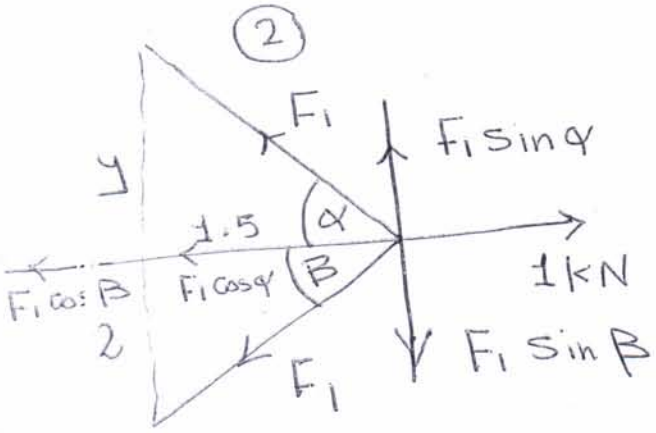

(3) $\Sigma F_y = \text{Zero}$

$\cancel{F_1} \sin\alpha = \cancel{F_1} \sin\beta$

$\sin\alpha = \sin\beta \Rightarrow \boxed{\alpha = \beta}$

$\tan\alpha = \tan\beta$

$\frac{y}{1.5} = \frac{2}{1.5} \Rightarrow \boxed{y = 2}$ (1)

(3) $\Sigma F_x = \text{Zero}$

$1 = 2 F_1 \cos\alpha$

$1 = 2 F_1 \frac{1.5}{2.5}$

$\Rightarrow \boxed{F_1 = 0.833 \text{ kN}}$ (1)

من فضلك اقلب الصفحة

(2) Determine the magnitude and coordinate direction angels of the resultant of two forces F_1 and F_2, Determine the angle θ between the two cables. Determine the magnitude of the projection of the force F_1 along cable AC.

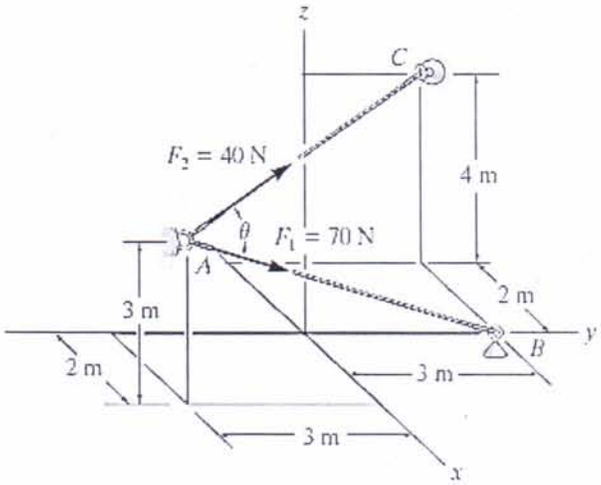

$\vec{F_1} = 70\,\hat{u}_{AB}$

$= 70\,\dfrac{-2i + 6\hat{j} - 3k}{7}$

$= -20\hat{i} + 60\hat{j} - 30\hat{k}$ (2)

A(2, -3, 3)

B(0, 3, 0)

C(-2, 3, 4)

(1)

$\vec{F_2} = 40\,\hat{u}_{AC}$

$= 40\,\dfrac{-4i + 6\hat{j} + k}{7.28}$ (2)

$= -21.98\hat{i} + 32.97\hat{j} + 5.49\hat{k}$

$\vec{R} = -41.98\hat{i} + 92.97\hat{j} - 24.\hat{k}$ (1)

$|\vec{R}| = 104.912\,N$ (1)

$\theta_x = \cos^{-1}\left(\dfrac{-41.98}{104.912}\right) = 113.58^\circ$

$\theta_y = \cos^{-1}\left(\dfrac{92.97}{104.912}\right) = 27.60^\circ$ (1)

$\theta_z = \cos^{-1}\left(\dfrac{-24.5}{104.912}\right) = 103.50^\circ$

With my best wishes

Dr. Mona Sameeh

angel between $\vec{F_1}$ & $\vec{F_2}$

$$\theta = \cos^{-1}(\hat{u}_{F_1} \cdot \hat{u}_{F_2}) \quad (1)$$

$$= \cos^{-1}\left(\frac{8+36-3}{50.96}\right) \cong 36.430$$

$$\left|(\vec{F_1})_{\parallel Ac}\right| = \vec{F_1} \cdot \hat{u}_{Ac}$$

(1)

$$= (-20\hat{i} + 60\hat{j} - 30\hat{k}) \cdot \left(\frac{-4\hat{i}+6\hat{j}+k}{7.28}\right)$$

$$\cong 56.32$$

#

Mansoura University
Faculty of Engineering
Mid Term Exam

BME Program
Level 000
Course Name: **Mechanics 1**
Course Code: **MATH002**

Total marks: 20
Allowed Time: **1 Hours**
Exam Date: **28-11-2018**

الإسم (رباعي):	
Section:	
Group:	
يتكون الإمتحان من أربعة أسئلة في اربع صفحات. **The Exam consists of 4 questions in 4 pages.**	

/20

Question 1:	
Question 2:	
Question 3:	
Question 4:	
Total Marks:	/40

[Q. 1] [**6 marks**] If $F_1 = 52$ N, $F_2 = 20$ N and $F_3 = 60$ N, choose the correct answer of the following:

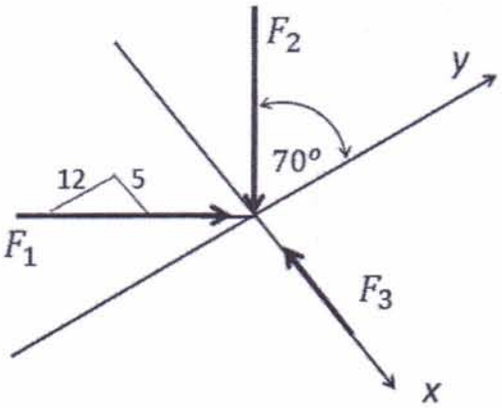

(i) The Cartesian vector form of $\mathbf{F_1}$ is [**2 marks**]

a) $20\,\mathbf{i} + 48\,\mathbf{j}$

b) $48\,\mathbf{i} - 20\,\mathbf{j}$

c) $-20\,\mathbf{i} + 48\,\mathbf{j}$

d) $48\,\mathbf{i} + 20\,\mathbf{j}$

(ii) The Cartesian vector form of $\mathbf{F_2}$ is [**2 marks**]

a) $-18.8\,\mathbf{i} - 6.8\,\mathbf{j}$

b) $18.8\,\mathbf{i} - 6.8\,\mathbf{j}$

c) $18.8\,\mathbf{i} + 6.8\,\mathbf{j}$

d) $-18.8\,\mathbf{i} + 6.8\,\mathbf{j}$

(iii) The resultant force, **R,** of $\mathbf{F_1}, \mathbf{F_2}$ and $\mathbf{F_3}$ has a magnitude and angle with the positive x-axis as [**2 marks**]

a) $R = 46.3$ N, and $\theta = 117.2^o$

b) $R = 46.3$ N, and $\theta = 62.8^o$

c) $R = 46.3$ N, and $\theta = -62.8^o$

d) $R = 46.3$ N, and $\theta = 242.8^o$

[Q. 3] [**16 marks**] Two forces $F_1 = 600$ lb, and $F_2 = 800$ lb are applied to the hook, as shown in the figure.

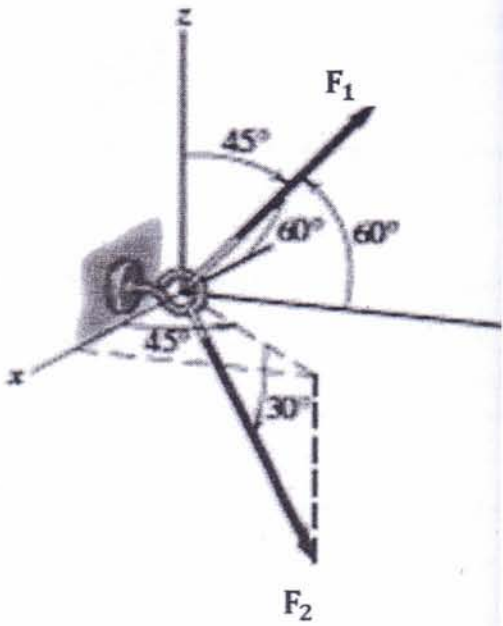

a) Express $\mathbf{F_1}$ and $\mathbf{F_2}$ as a Cartesian vectors. [**4 marks**]

b) Determine the unit vectors perpendicular to both of $\mathbf{F_1}$ and $\mathbf{F_2}$. [**4 marks**]

c) Determine the projections of $\mathbf{F_1}$ along the coordinate axes. [**3 marks**]

d) Determine the components of $\mathbf{F_2}$ which are parallel and perpendicular to $\mathbf{F_1}$. Express the results in Cartesian vector forms. [**5 marks**]

[Q. 4] [**8 marks**] The 800 N sphere is supported by two smooth inclined planes, spring *CD*, and two cables *ABC* and *CE*. Determine the forces of the smooth planes on the sphere. If the tensile force of the cable *ABC* is 400 N.

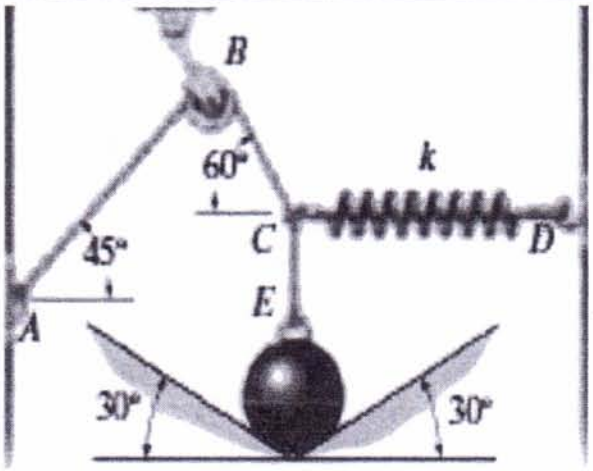
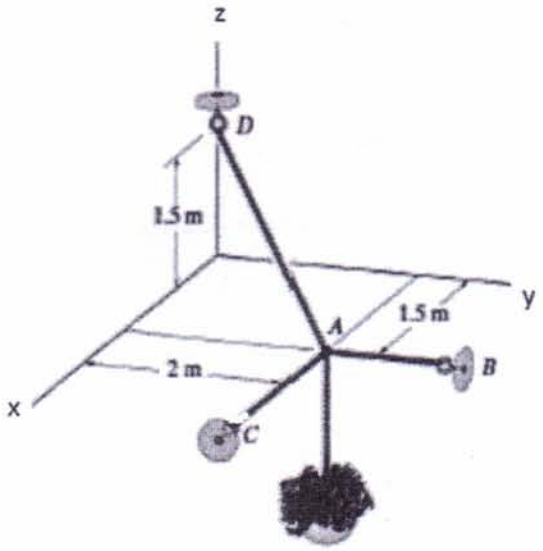
[Q. 2] [**10 marks**] Determine the maximum mass of the supported crate so that the tension developed in any cable shown does not exceed 5 kN.