Mansoura University
Faculty of Engineering
BME-CIE Programs
Mech 1 (MATH002)

Final Exam
Time: 2 Hrs
Date: Dec 2017
Full Marks: 50 marks

Solve the following questions:

(1) If the force developed in each of the cables and strut cannot exceed 300 lb, determine the largest weight of the crate that can be supported. Also, what is the force developed along strut AD? [10 marks]

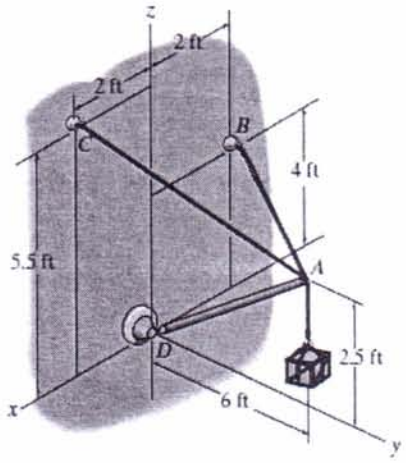

(2) Determine the magnitudes and coordinate direction angles of the resultant force and moment so that the equivalent resultant system acts through the midpoint O of the tube. [10 marks]

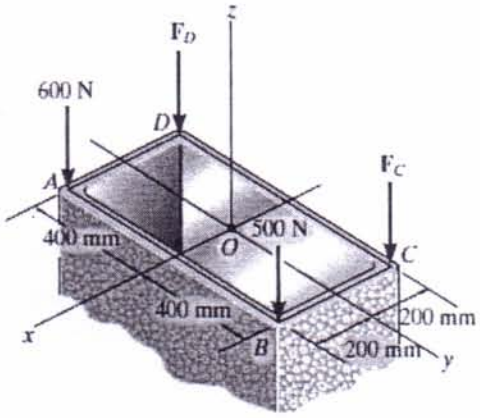

(3) Determine the reactions at the supports ? [10 marks]

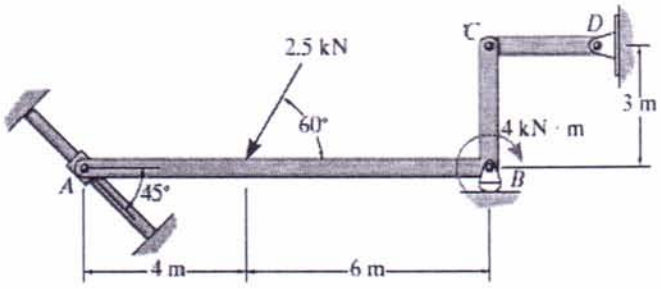

(4) The coefficient of static friction between the 150-kg crate and the ground is $\mu_{s1} = 0.3$, while the coefficient of static friction between the 80-kg man's shoes and the ground is $\mu_{s2} = 0.4$. Determine if the man can move the crate. [10 marks]

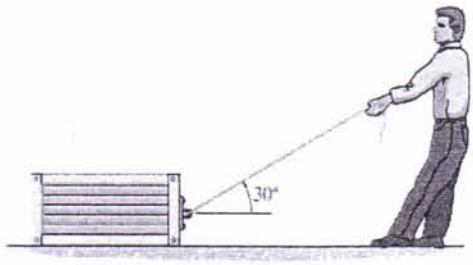

(5) Replace the loading acting on the beam by resultant force and moment exist at end A. [5 marks]

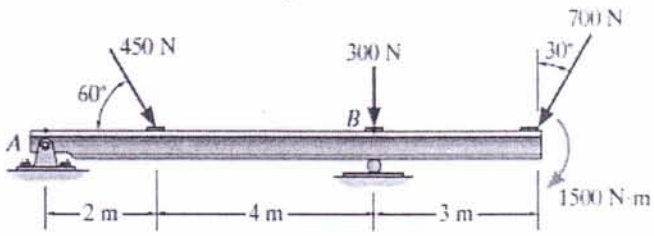

(6) Locate the center of mass of the block. Materials 1, 2 and 3 have densities of 2700 kg/m^3, 5700 kg/m^3 , and 7800 kg/m^3, respectively. [10 marks]

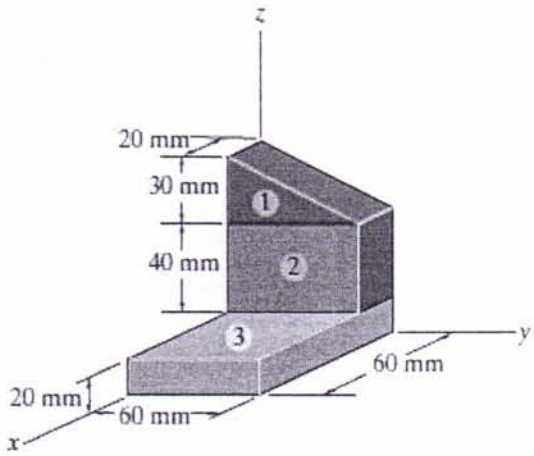

انتهت الأسئلة مع تمنياتى بالتوفيق

Model Answer

(1) $D(0,0,0)$, $A(0, 6, 2.5)$

$B(-2, 0, 4)$, $C(2, 0, 5.5)$

$$\vec{\omega} = -\omega k$$

$$\therefore \vec{F}_{AD} = F_{AD}\left(\frac{0i - 6j - 2.5k}{6.5}\right)$$

$$\vec{F}_{AB} = F_{AB}\left(\frac{-2i - 6j + 1.5k}{6.5}\right)$$ 3

$$\vec{F}_{AC} = F_{AC}\left(\frac{2i - 6j + 3k}{7}\right)$$

$$\Sigma F_x = \frac{-2}{6.5} F_{AB} + 2\frac{F_{AC}}{7} = 0$$

$$\boxed{F_{AB} = \frac{6.5}{7} F_{AC}} \quad (1)$$

$$\Sigma F_y = \frac{-6 F_{AD}}{6.5} - \frac{6}{6.5}\left(\frac{6.5}{7}\right) F_{AC} - \frac{6}{7} F_{AC} = 0$$

$$F_{AD} = -\frac{6.5}{6}\left[\frac{12}{7}\right] F_{AC} = -\frac{13}{7} F_{AC} \quad (2)$$

$$= \frac{13}{7} F_{AC} \; [C]$$

A

$\therefore$ The maximum force is developed in F_{AD} i.e. $\boxed{F_{AD} = 300}$ lb

$$\therefore \quad F_{AC} = \frac{300 * 7}{13} = 161.4 \text{ lb}$$

$$\therefore \quad \boxed{F_{AB} = \frac{6.5}{7} F_{AC} = 150 \text{ lb}}$$

$$\therefore \quad \sum F_z = -w + \frac{2.5}{6.5}(300) + \frac{1.5}{6.5}(150) + \frac{3}{7}(161.4) = 0$$

3

$$\boxed{w_{max} = 219.2} \text{ lb}$$

10

10.

(2)

$$\vec{F}_R = -600k - 600k - 500k - 500k$$

$$= -2200\,k \quad N$$

$$\vec{M}_{R_O} = \vec{r}_{OA} \times \vec{F}_A + \vec{r}_{OD} \times \vec{F}_D + \vec{r}_{OB} \times \vec{F}_B$$

$$+ \vec{r}_{OC} \times \vec{F}_C$$

3

where $A(0.2, -0.4, 0)$, $B(0.2, 0.4, 0)$

$C(-0.2, 0.4, 0)$, $D(-0.2, -0.4, 0)$

$$\vec{M}_{R_O} = \begin{vmatrix} i & j & k \\ 0.2 & 0.4 & 0 \\ 0 & 0 & -500 \end{vmatrix} + \begin{vmatrix} i & j & k \\ -0.2 & 0.4 & 0 \\ 0 & 0 & -500 \end{vmatrix} + \begin{vmatrix} i & j & k \\ -0.2 & -0.4 & 0 \\ 0 & 0 & -600 \end{vmatrix}$$

$$+ \begin{vmatrix} i & j & k \\ 0.2 & -0.4 & 0 \\ 0 & 0 & -600 \end{vmatrix} = i(-200 - 200 + 240 + 240)$$

$$-j(-100 + 100 + 120 - 120) + k(0)$$

$\boxed{\vec{M}_{R_O} = 80\,i}$, $\boxed{M_{R_O} = 80}$, $\theta_x = 0$, $\theta_y = \theta_z = 90^\circ$

3

$\boxed{\vec{F}_R = -2200k}$, $\boxed{F_R = 2200}$, $\theta_x = \theta_y = 90^\circ$, $\theta_z = 0$

10

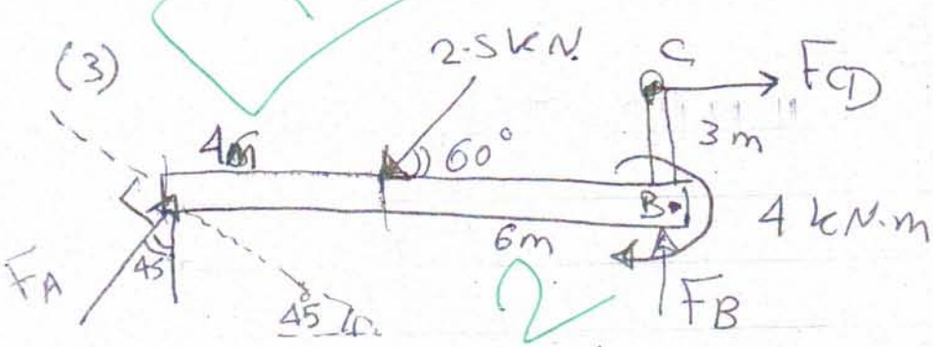

(F.B.D)

2

$$\Sigma M_C = -4 - 2.5\cos 60\,(3) + 2.5\sin 60\,(6)$$

$$- F_A \cos 45\,(10) + F_A \sin 45\,(3) = 0$$

$$\boxed{F_A = 1.06\,kN}$$ 3

$$\Sigma F_x = F_{CD} - \frac{2.5}{2} + 1.06\sin 45 = 0$$

$$\boxed{F_{CD} = 0.5\ kN}$$ 3

$$\Sigma F_y = F_B - 2.5\sin 60 + 1.06\cos 45 = 0$$

$$\boxed{F_B = 1.415}\ kN$$

2

10

(4)

(a) For the crate:

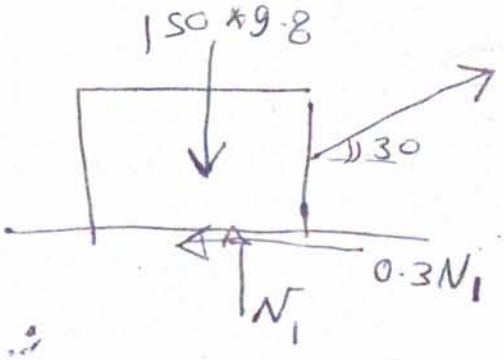

2 [Impending Motion]

$\therefore$

$$\sum F_x = P\cos 30 - 0.3 N_1 = 0$$

$$\boxed{N_1 = P\frac{\cos 30}{0.3}} \quad (1)$$

$$\sum F_y = -150 * 9.8 + \frac{P}{2} + P\left(\frac{\cos 30}{0.3}\right) = 0$$

$$\boxed{P = 434} \ N$$

4

(b) For the man:

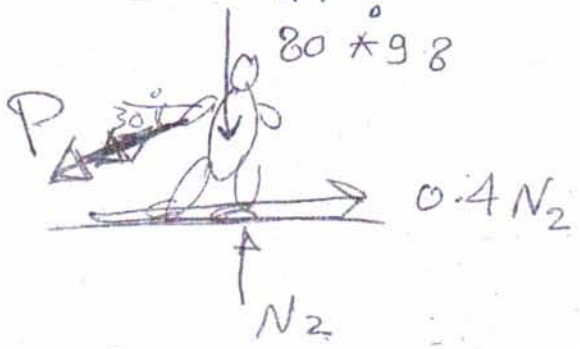

$$\sum F_x = -P\cos 30 + 0.4 N_2 = 0$$

$$\boxed{P = \frac{0.4 N_2}{\cos 30}}$$

$$\Sigma F_y = -\frac{0.4\,N_2}{\cos 30}(\sin 30) + N_2 - 80 * 9.8 = 0$$

$$\boxed{N_2 = 1019.4}$$

$$\Longrightarrow \therefore \boxed{P^* = 470.85} \quad N$$

$$\therefore \quad \therefore \quad P^* > P$$

Yes, he can

(5)

$$\vec{F}_R = (450 \cos 60 - 700 \sin 30)\,i + (-450 \sin 60 - 300 - 700 \cos 30)\,j$$

$$= -125\,i - 1295.93\,j \quad N$$

$$\vec{M}_R = [-1500 - 450 \sin 60\,(2) - 300\,(6) - 700 \cos 30\,(9)]\,k = 9535 \text{ KN.m}$$

$$\boxed{|F_R| = 1302 \quad N}$$

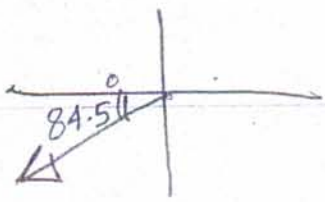

part	m	x	y	z	mx	my	mz
1	0.0486	10	20	70	0.486	0.972	3.402
2	0.274	10	30	40	2.74	8.22	10.96
3	0.562	30	30	10	16.86	16.86	5.62
	$\Sigma m =$ 0.8846 kg				$\Sigma mx =$ 20 kg.mm	$\Sigma my =$ 26.052	$\Sigma mz =$ 19.982

10

$\bar{x} = 22.61$ mm

$\bar{y} = 29.4$ mm

$\bar{z} = 22.6$ mm

6